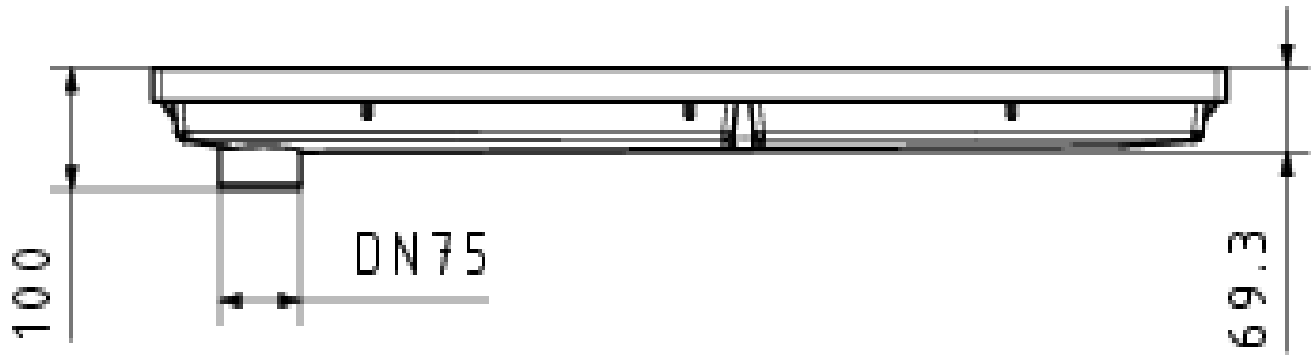
100
DN75
69.3

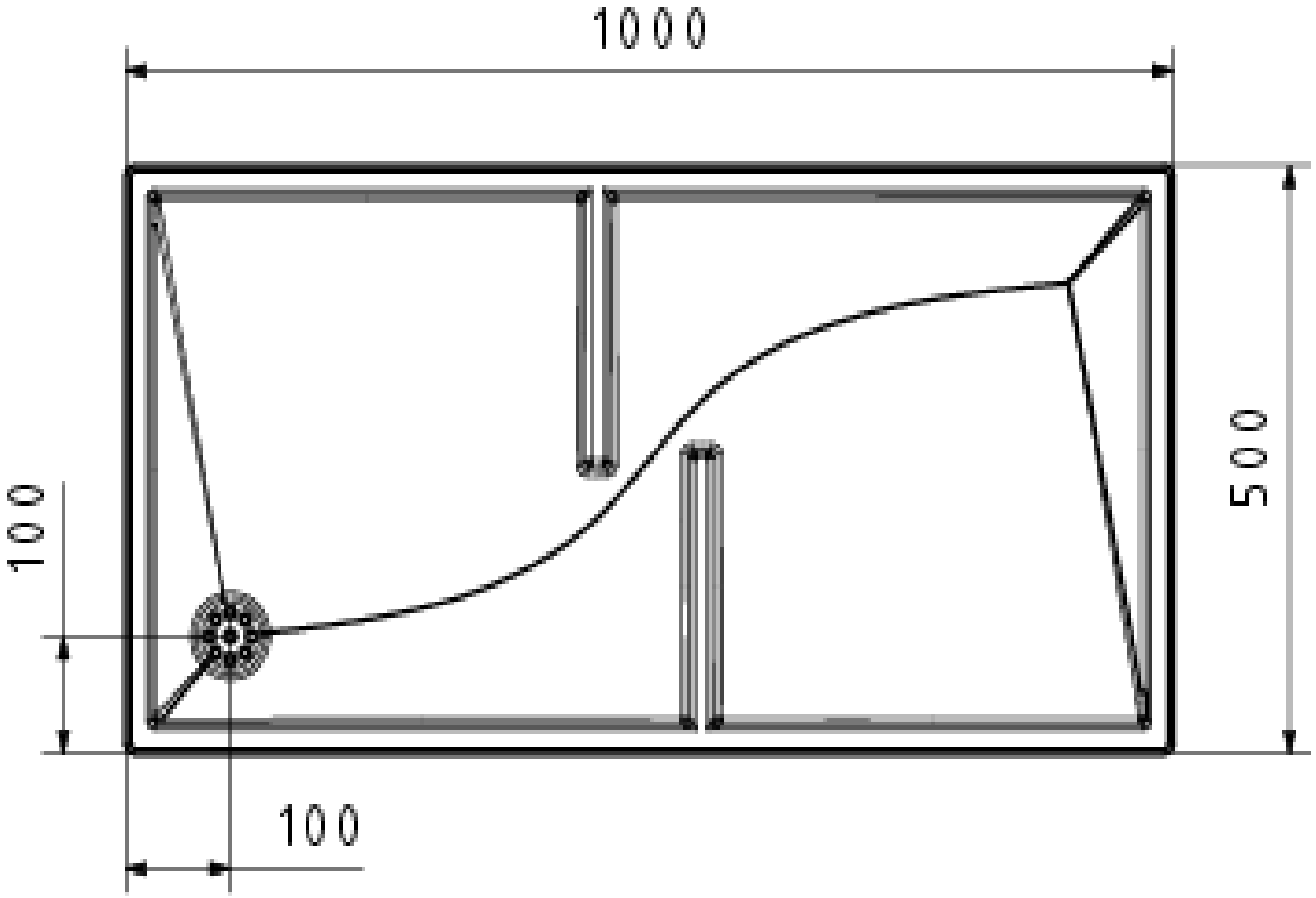
1000
500
100
100